Elevation View

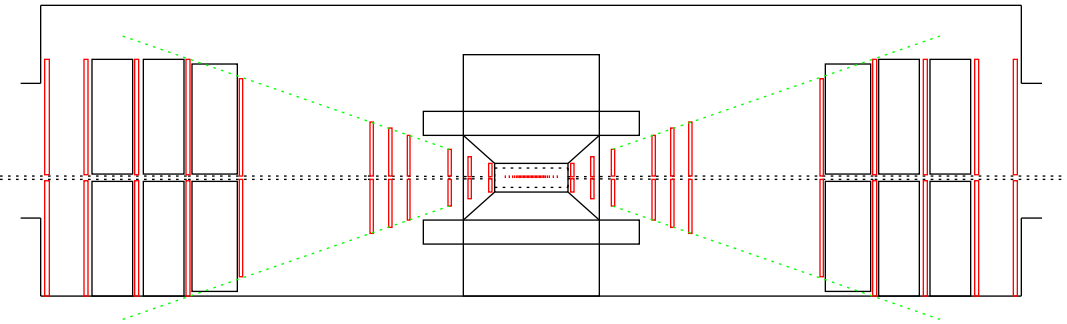
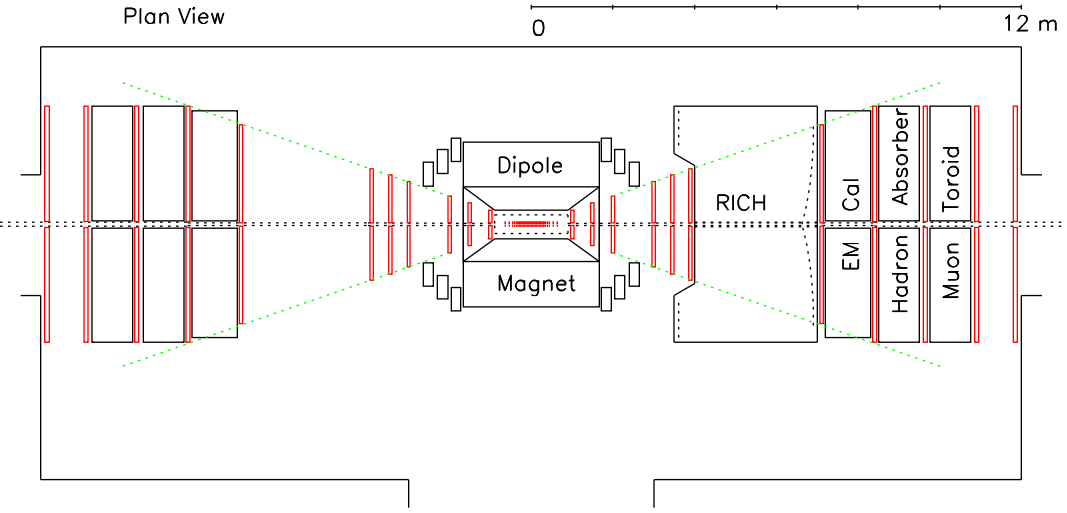
Plan View