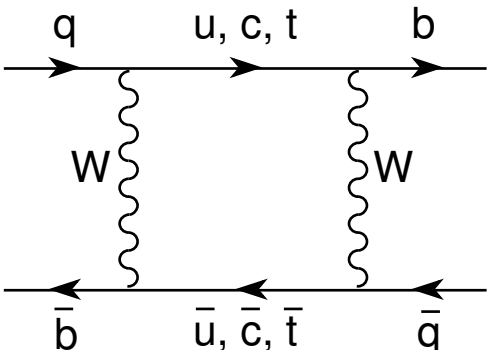
q
u, c, t
b
W
W
$\bar{b}$
$\bar{u}$, $\bar{c}$, $\bar{t}$
$\bar{q}$

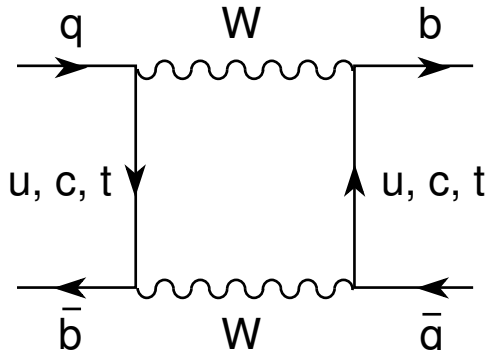
q
W
b
u, c, t
u, c, t
$\bar{b}$
W
$\bar{q}$